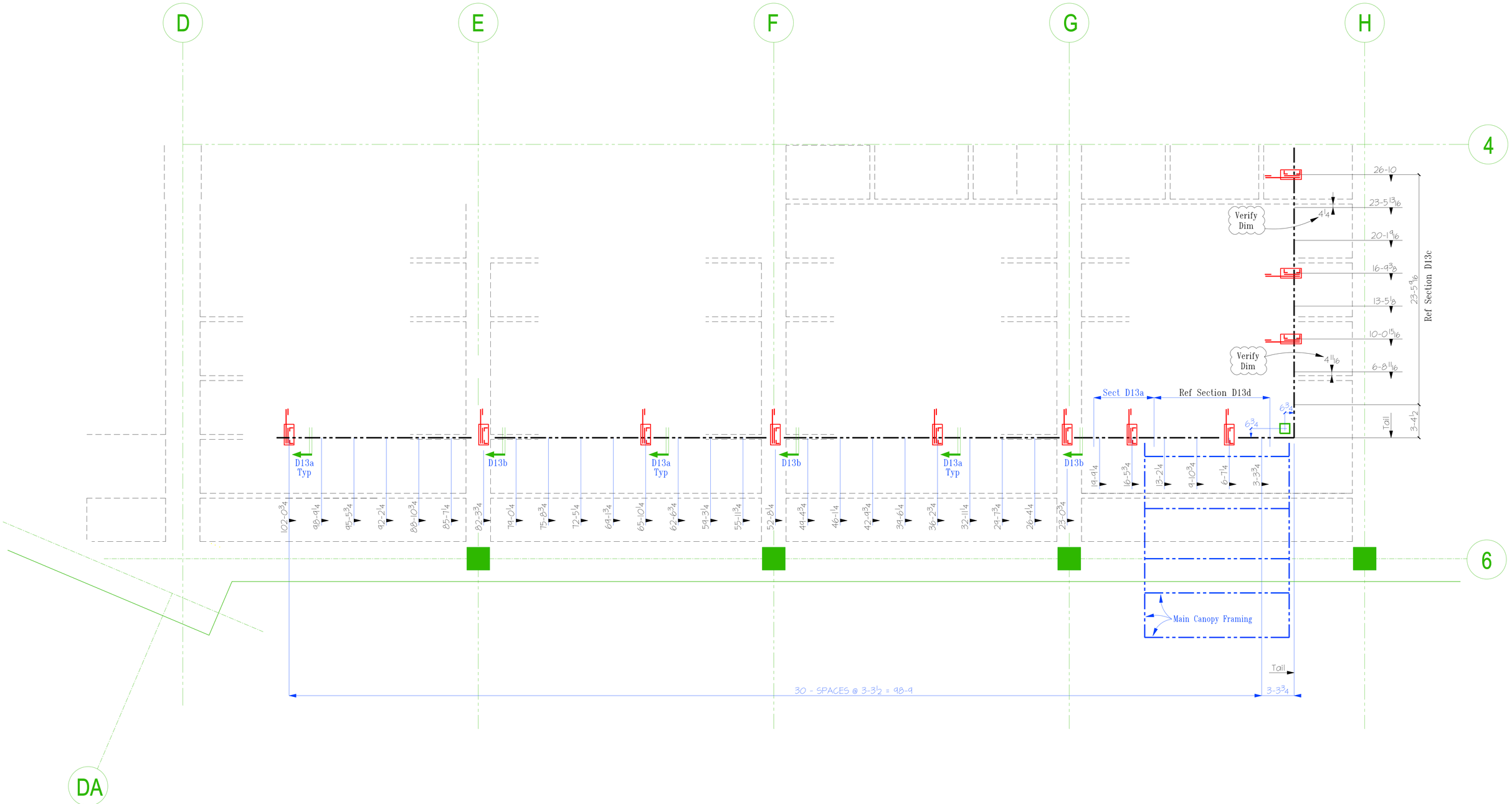

PRINT RECORD		
APPVL	SHOP	FIELD

– DESCRIPTION OF REVISIONS MADE TO DRAWING –

1
2
3

REVISION DESCRIPTION | DATE | MADE BY | CHK BY | SHOPED

REF DWG Ref CHMI Drawings & SK-568 ~ 570 FN= Eldridge_D50.dwg

MATERIAL GRADE SHELL BE A36 U.N.O.
WF SHAPEs A992 TUBEs A500 Gr B
CHANNELs A992 PIPEs A53 Gr B
SCHEDULE "D" 501.01

COATING One S/C Red Oxide Primer

13/16" OPEN HOLE | 1/4" FILLETS | E70XX ELECTRODES

APPROVAL ____ TO SHOP ____

CSS

DETAILS OF Glass Wall Supoort
CUSTOMER Eldridge III Office Bulding
ARCHITECT
ENGINEER
PROJECT
LOCATION 737 N Eldrige Py. Houston Tx 77079

DETAIL DY 4-1-09
CHK.R DY

JOB # 1498

SHEET # E50

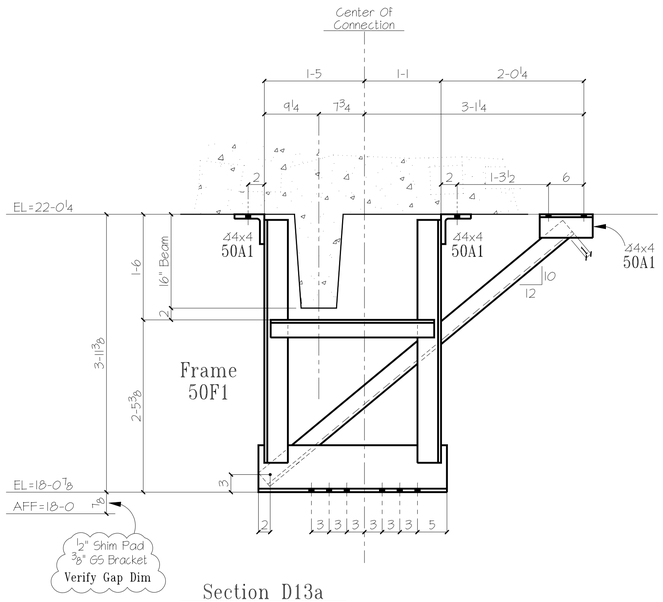

Section D13a

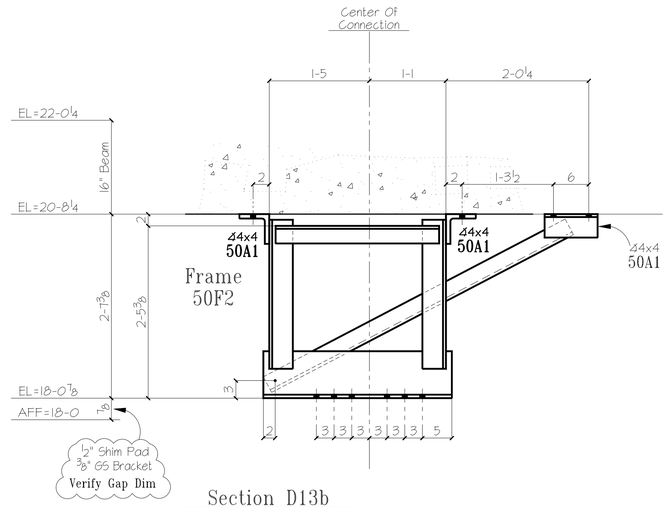

Section D13b

Used At Concrete Beam

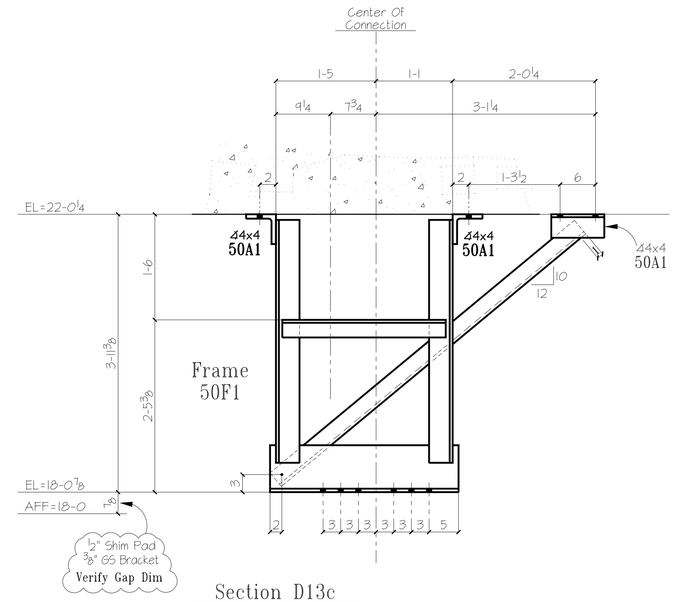

Section D13c

Ref ?

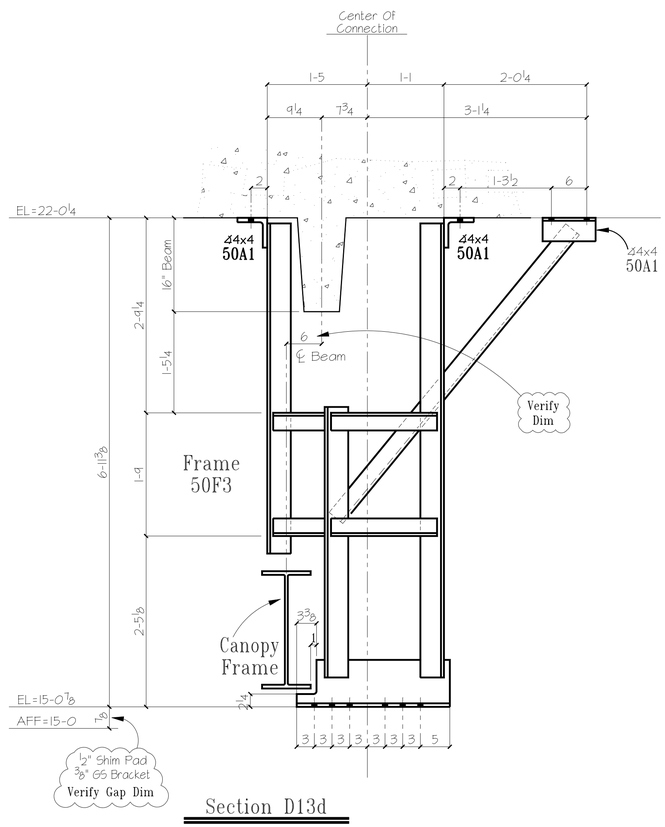

Section D13d

Used At Main Canopy

Plans For Approval
& Not Construction

Useable Temple Mark Letters
a b c d e f g h j k m n p q r s t v w y z

PRINT RECORD		
APPVL	SHOP	FIELD

– DESCRIPTION OF REVISIONS MADE TO DRAWING –

1 ,
2 ,
3 ,

REVISION DESCRIPTION | DATE | MADE BY | CHK BY | SHOPED

REF DWG Ref CHMI Drawings & SK-568 ~ 570 FN= Eldridge_D50.dwg

MATERIAL GRADE SHELL BE A36 U.N.O.
WF SHAPEs A992 TUBEs A500 Gr B
CHANNELs A992 PIPEs A53 Gr B
SCHEDULE "D" S01.01

COATING One S/C Red Oxide Primer

13/16"Ø OPEN HOLE | 1/4" FILLETS | E700XX ELECTRODES

APPROVAL , TO SHOP ,

DETAILS OF Glass Wall Supoort
CUSTOMER
ARCHITECT
ENGINEER
PROJECT
LOCATION 737 N Eldrige Py. Houston ,

DETAIL DY 4-1-09
CHK.R tsd ,

JOB # 1498

SHEET # E51

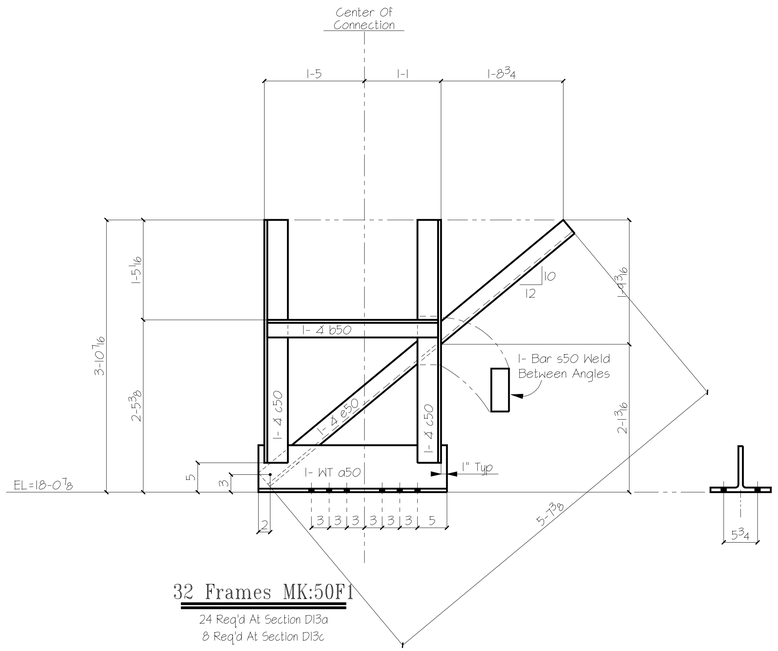

32 Frames MK:50F1

24 Req'd At Section D13a
8 Req'd At Section D13c

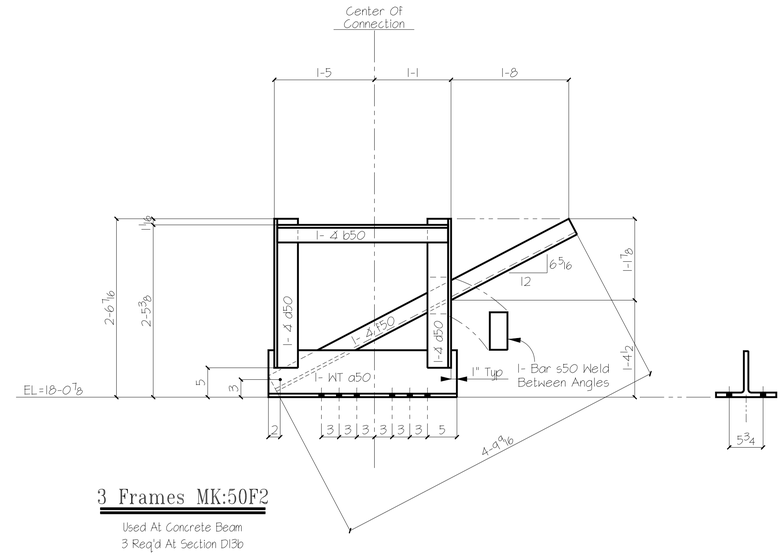

3 Frames MK:50F2

Used At Concrete Beam
3 Req'd At Section D13b

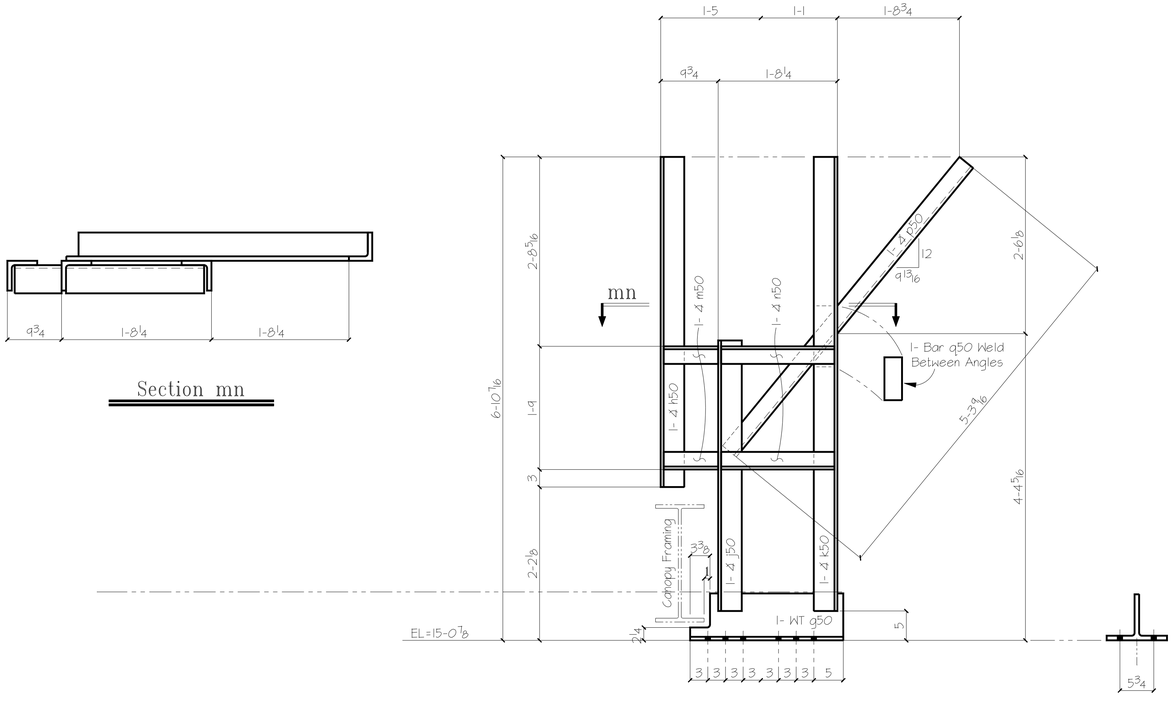

Section mn

4 Frames MK:50F4

Used At Main Canopy
4 Req'd At Section D13d

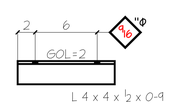

? Angles MK:50A1

? - Hilit KB III 1/2"Φ x 0-4

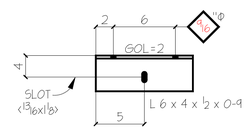

2 Angles MK:50A2

2 - Hilit KB III 1/2"Φ x 0-4

— BILL OF MATERIAL —

	MARK	QTY	DESCRIPTION	LENGTH	REMARKS
Each	**50F1**	32	Glass Frames		
1	a50	32	WT 8 x 33.5	2-8	
1	b50	32	∠ 3 x 3 x 1/4	2-5 3/8	
2	c50	64	∠ 4 x 4 x 1/4	3-5 7/16	
1	e50	32	∠ 3 x 3 x 3/8	5-7 3/8	
1	s50	32	Bar 3/8 x 4	0-8	
	50F2	3	Glass Frames		
	a50	3	WT 8 x 33.5	2-8	
	b50	3	∠ 3 x 3 x 1/4	2-5 3/8	
	d50	6	∠ 4 x 4 x 1/4	2-1 3/8	
	f50	3	∠ 3 x 3 x 3/8	4-9 9/16	
	s50	3	Bar 3/8 x 4	0-8	
Each	**50F3**	4	Glass Frames		
1	g50	4	WT 8 x 33.5	2-2	
1	h50	4	∠ 4 x 4 x 1/2	4-8 5/16	
1	j50	4	∠ 4 x 4 x 1/2	3-10 1/8	
1	k50	4	∠ 4 x 4 x 1/2	6-5 7/16	
2	m50	8	∠ 4 x 4 x 1/2	0-9 3/8	
2	n50	8	∠ 4 x 4 x 1/2	1-7 7/8	
1	p50	4	∠ 3 x 3 x 3/8	5-3 9/16	
1	q50	4	Bar 3/8 x 4	0-10	
	50A1	?	∠ 4 x 4 x 1/2	0-9	
	50A2	1	∠ 6 x 4 x 1/2	0-9	

Plans For Approval
& Not Construction

Useable Temple Mark Letters
a b c d e f g h j k m n p q r s t v w y z

PRINT RECORD		
APPVL	SHOP	FIELD

— DESCRIPTION OF REVISIONS MADE TO DRAWING —

1 ,
2 ,
3 ,

REVISION DESCRIPTION | DATE | MADE BY | CHK BY | SHOPED

REF DWG Ref CHMI Drawings & SK-568 ~ 570 FN: Eldridge_D50.dwg

MATERIAL GRADE SHELL BE A36 U.N.O.
WF SHAPEs A992 TUBEs A500 Gr B
CHANNELs A992 PIPEs A53 Gr B
SCHEDULE "D" 501.01

COATING One S/C Red Oxide Primer

13/16"Φ OPEN HOLE | 1/4" FILLETS | E700XX ELECTRODES

APPROVAL , TO SHOP ,

CSS

DETAILS OF Glass Wall Supoort
CUSTOMER
ARCHITECT
ENGINEER
PROJECT
LOCATION 737 N Eldrige Py. Houston ,

DETAIL DY 4-1-09
CHK.R tsd ,

JOB # 1498

SHEET # D50