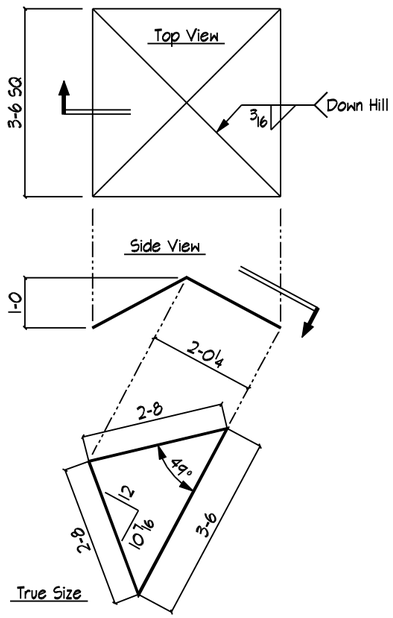

Detail of Roof PL's - a3

Ref L3 & H2 - 4 For Each 4 Piers

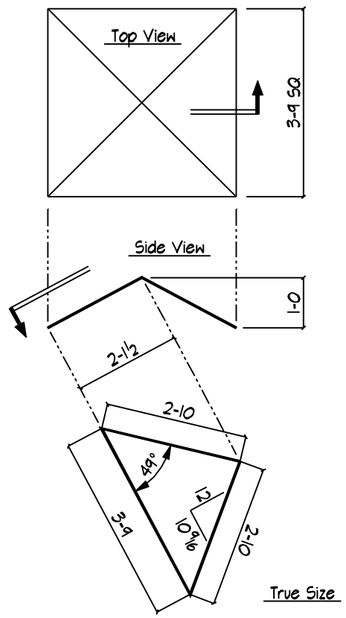

Detail of Roof PL's - b3

Ref L3 & H4 - 4 For Each 5 Towers

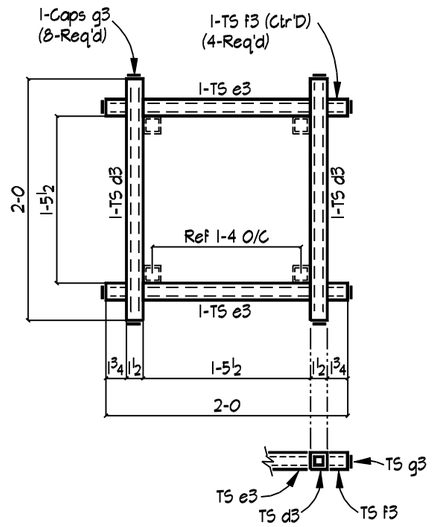

Detail of Tubes Type A

Ref L3 & H2 - 4 For Each 4 Piers

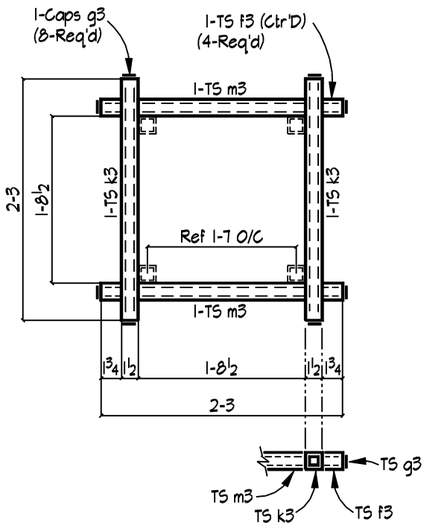

Detail of Tubes Type B

Ref L3 & H4 - 4 For Each 5 Towers

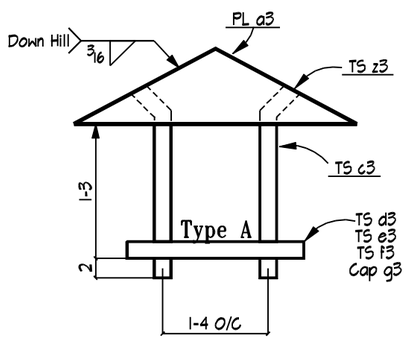

12 Lanterns 3LT1

Ref L3 & H2.0
4 at Gates H2.0
8 at Pool H3.0

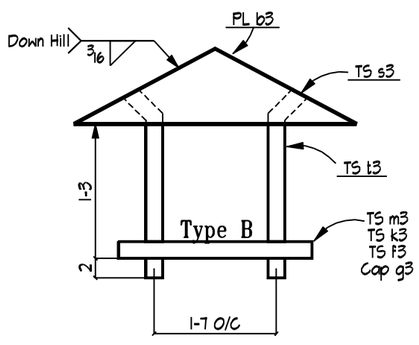

5 Lanterns 3LT2

Ref L3 & H4.0 - Tower

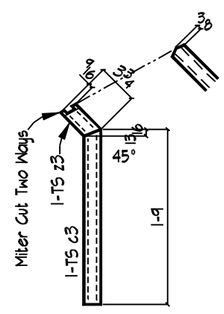

Detail of Post Columns - c3 & z3

Ref L3 & H2 - 4 For Each 4 Piers

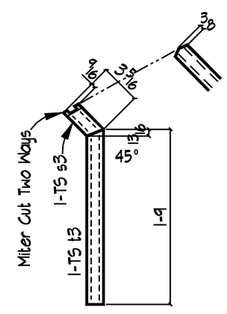

Detail of Post Columns - t3 & s3

Ref L3 & H4 - 4 For Each 5 Towers

- BILL OF MATERIAL -

QTY	DESCRIPTION	LENGTH	MARK	REMARKS
12	Lantern Box		3LT1	
48	PL ¼ x 24¼	3-6	a3	
48	TS 1½ x 1½ x ⅛	1-9	c3	
48	TS 1½ x 1½ x ⅛	0-3¾	z3	Miter 2 Ways
24	TS 1½ x 1½ x ⅛	2-0	d3	
24	TS 1½ x 1½ x ⅛	1-5½	e3	
48	TS 1½ x 1½ x ⅛	0-1¾	f3	
96	1½" TS Caps	,	g3	SSS Buy Out
5	Lantern Box		3LT2	
20	PL ¼ x 25½	3-9	b3	
20	TS 1½ x 1½ x ⅛	1-9	t3	
20	TS 1½ x 1½ x ⅛	0-3 5/16	s3	Miter 2 Ways
10	TS 1½ x 1½ x ⅛	2-3	k3	
10	TS 1½ x 1½ x ⅛	1-8½	m3	
20	TS 1½ x 1½ x ⅛	0-1¾	f3	
40	1½" TS Caps	,	g3	SSS Buy Out

- UNLESS NOTED OTHERWISE -

None "Φ OPEN HOLES
1/8" FILLET WELD

COATING One S/C Red Oxide Primer

MATERIAL GRADE SHELL BE A36 U.N.O.
WF SHAPEs , TUBEs A500 Gr B
CHANNELs , PIPEs ,

REF DWG L3 & H2.0 & H4.0

Tower Steel Services

DETAILS OF Lantern Tower
PROJECT WoodLands At Knoxville
LOCATION Tennessee
CUSTOMER ,

DETAIL DY 07-05-07
CHK.R ,
REV # 1
JOB # 910
DWG # 3