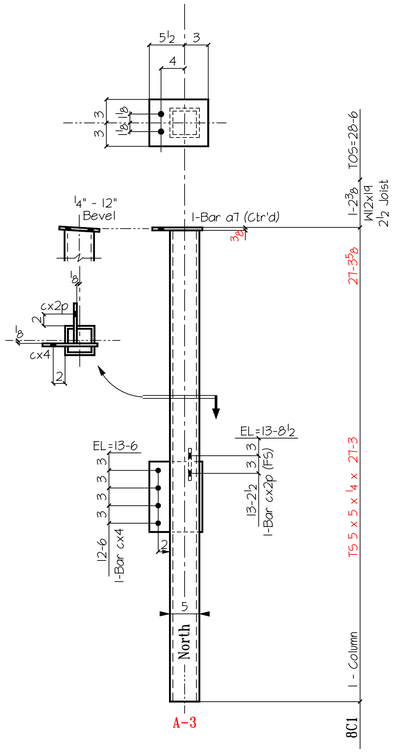

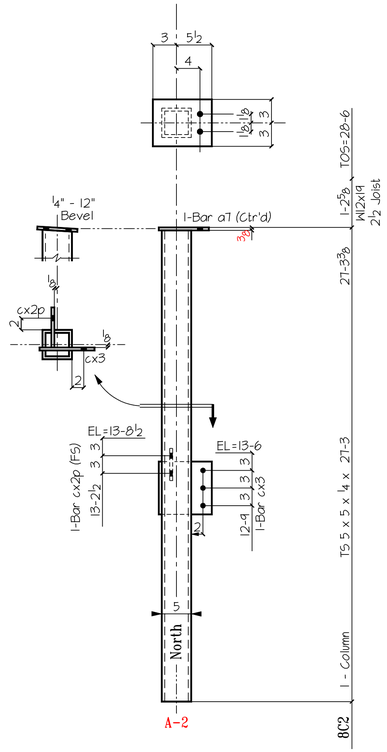

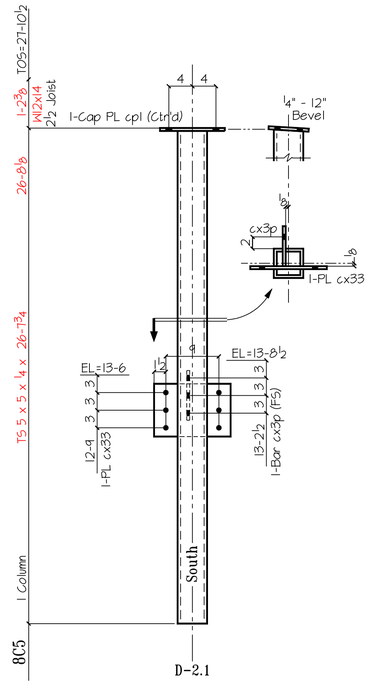

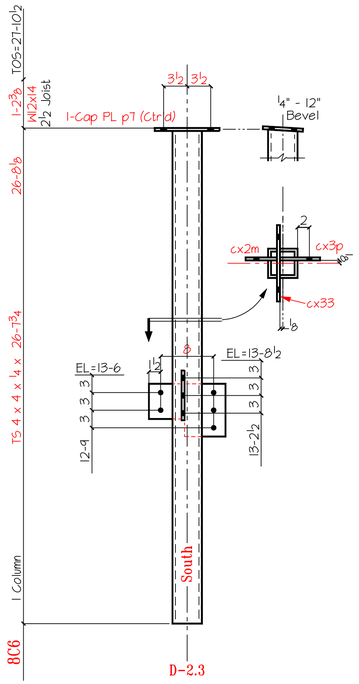

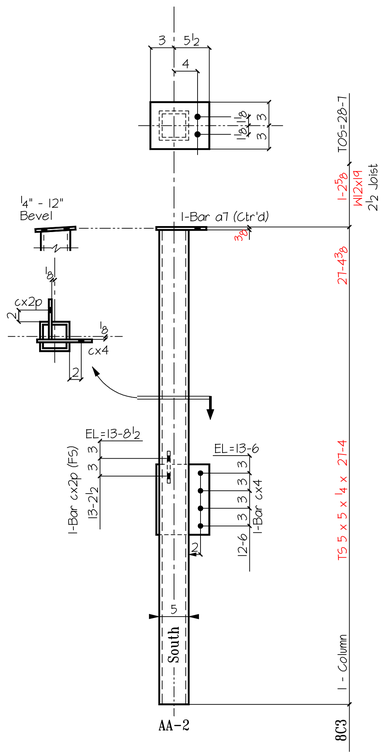

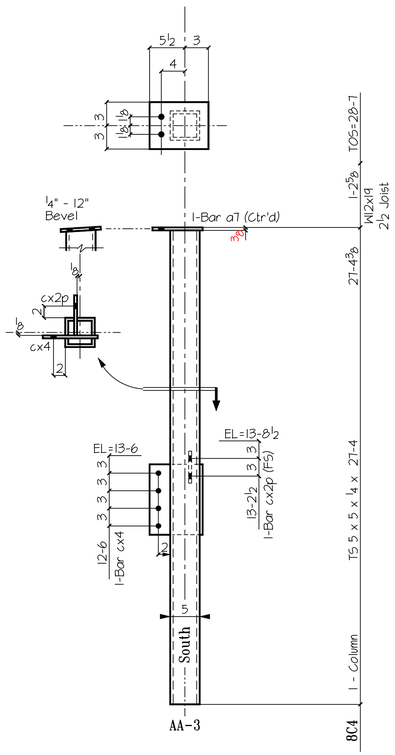

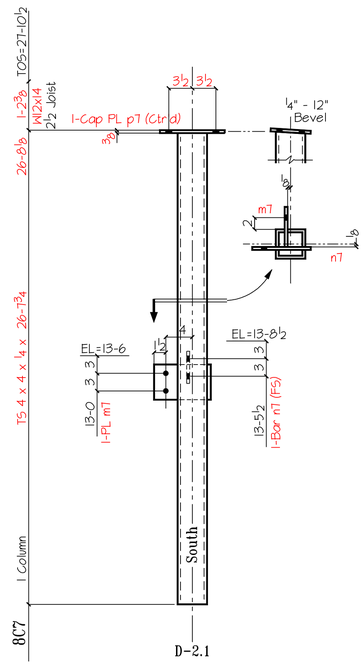

— BILL OF MATERIAL —

SHIP MK	TEMP MK	QTY	DESCRIPTION	LENGTH	REMARKS
8C1		1	TS 5 x 5 x ¼	27-3	
	a7	1	Bar ½ x 6	0-8½	
	cx2p	1	Bar ⅜ x 6½	0-6	
	cx3	1	Bar ⅜ x 9	0-9	
8C2		1	TS 5 x 5 x ¼	27-3	
	a7	1	Bar ½ x 6	0-8½	
	cx2p	1	Bar ⅜ x 6½	0-6	
	cx3	1	Bar ⅜ x 9	0-9	
8C3		1	TS 5 x 5 x ¼	27-4	
	a7	1	Bar ½ x 6	0-8½	
	cx2p	1	Bar ⅜ x 6½	0-6	
	cx4	1	Bar ⅜ x 9	1-0	
8C4		1	TS 5 x 5 x ¼	27-4	
	a7	1	Bar ½ x 6	0-8½	
	cx2p	1	Bar ⅜ x 6½	0-6	
	cx4	1	Bar ⅜ x 9	1-0	
8C5		1	TS 5 x 5 x ¼	26-7½	
	cpl	1	Bar ½ x 6	1-0	
	cx33	1	Bar ⅜ x 9	1-0	
	cx3p	1	Bar ⅜ x 9	0-6½	
8C6		1	TS 4 x 4 x ¼	26-7¾	
	cpl	1	Bar ½ x 6	1-0	
	cx33	1	Bar ⅜ x 9	1-0	
	cx3p	1	Bar ⅜ x 9	0-6½	
	cx2m	1	Bar ⅜ x 6	0-6½	
8C7		1	TS 4 x 4 x ¼	26-7¾	
	cpl	1	Bar ½ x 6	1-0	
	cx2	1	Bar ⅜ x 6	0-8	
	cx3p	1	Bar ⅜ x 9	0-6½	

INSPECTION

WELDER	FINALE

— DESCRIPTION OF REVISIONS MADE TO DRAWING —

REVISION DESCRIPTION	DATE	MADE BY	CHK BY	SHOPED
1				
2				
3				

REF DWG E5 & S2.2 FN= DaySpa_D7-D10.dwg

MATERIAL GRADE SHELL BE A36 U.N.O.
WF SHAPEs A992 TUBEs A500
CHANNELs A992 PIPEs A501 or A53

COATING One S/C Red Oxide Primer

13/16"Φ OPEN HOLE | 1/4" FILLETS | E700XX ELECTRODES

APPROVAL _____ TO SHOP _____

DETAILS OF Columns
CUSTOMER
ARCHITECT
PROJECT Whispering Waters Day Spa
LOCATION

DETAIL DY 4-12-08
CHK.R

JOB # 8007

SHEET # D 8