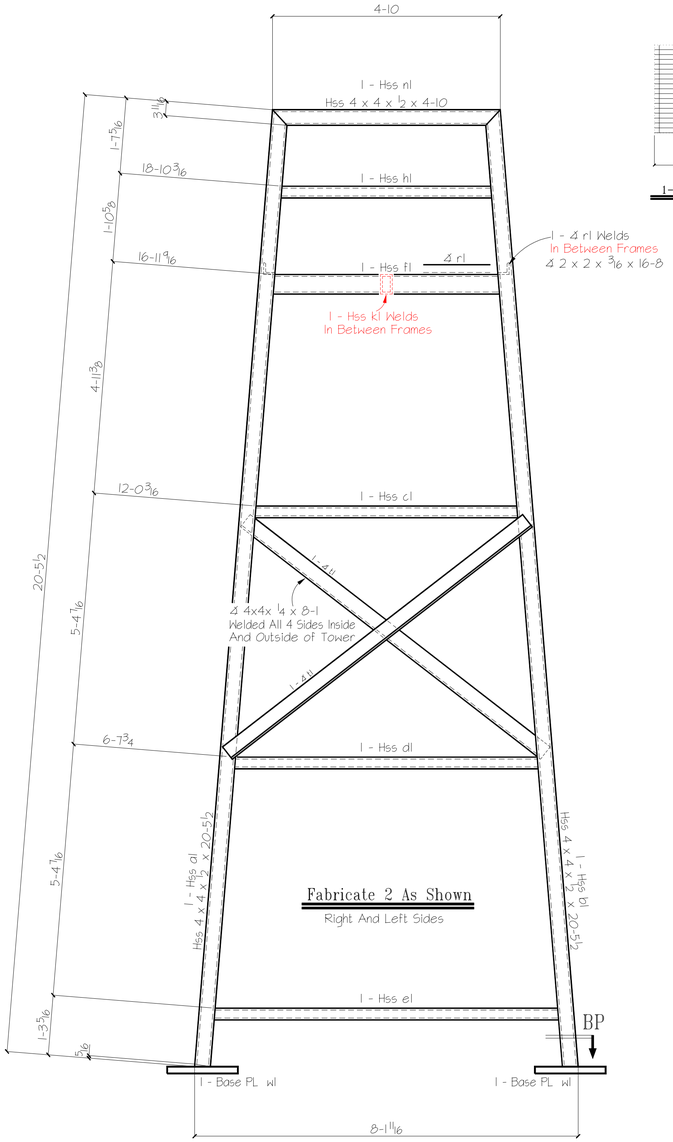

1- Grading sl

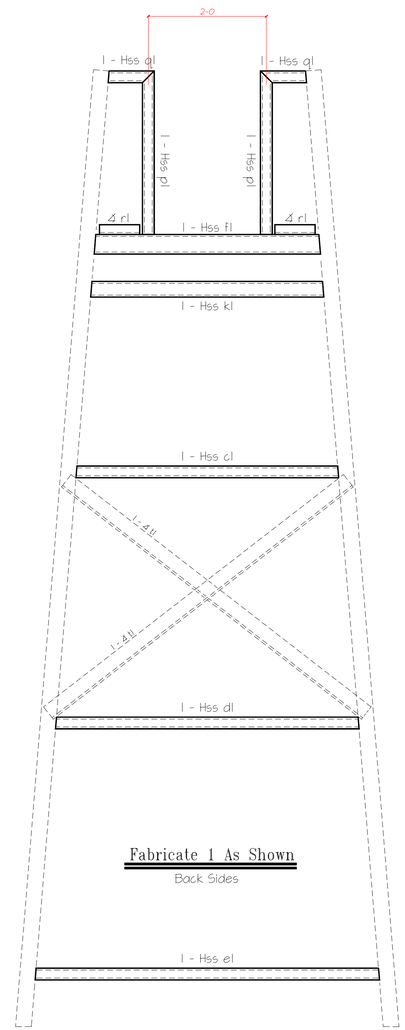

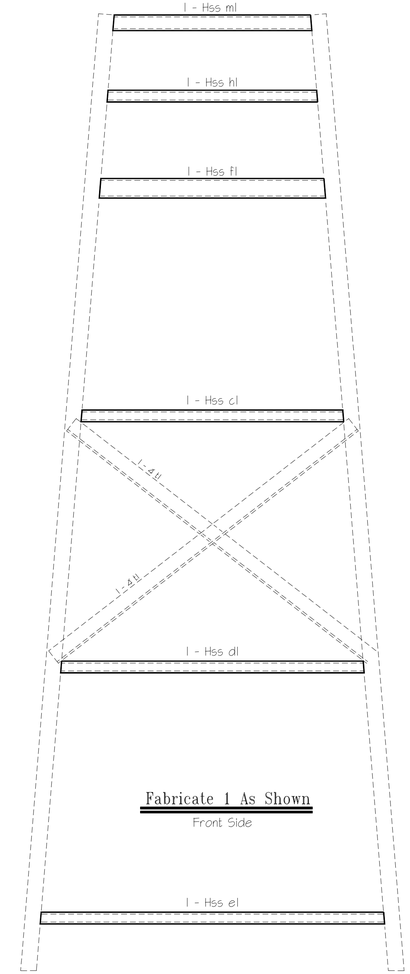

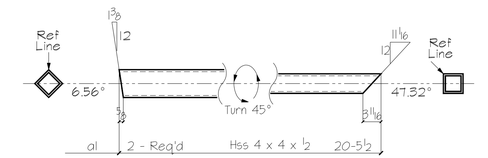

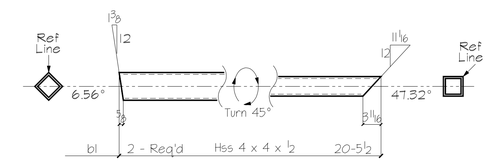

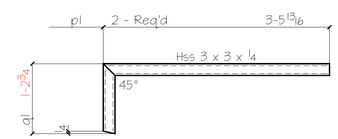

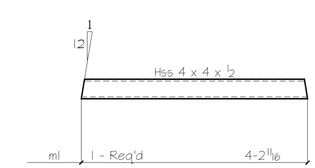

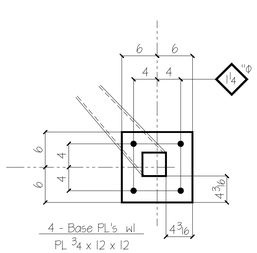

SECTION BP

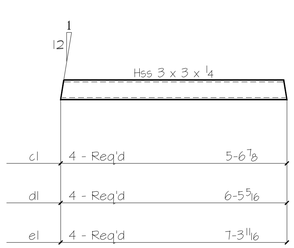

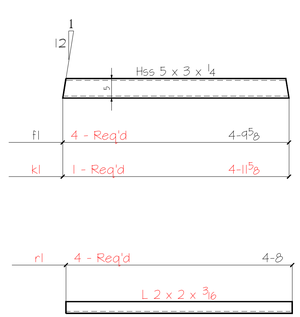

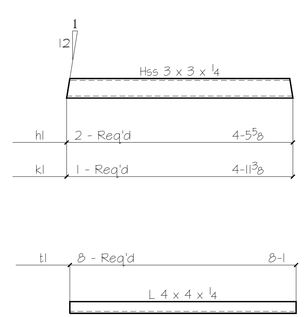

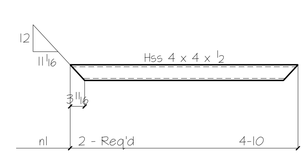

– DESCRIPTION OF REVISIONS MADE TO DRAWING –

1 , , ,
2 , , ,
3 , , ,
4 , , ,

REF DWG ,

– UNLESS NOTED OTHERWISE –

1/4" FILLETS

13/16" ø OPEN HOLE

MATERIAL GRADE SHELL BE A36 U.N.O.
WF SHAPEs A572 TUBEs A500
CHANNELs A572 PIPEs A501 or A53
REF SCHEDULE ,

COATING Hot Dip Galvanized

DETAILS OF Tower Framing
PROJECT School Band Tower
LOCATION
CUSTOMER
ARCHITECT

DETAIL	SHOP CODE	SHEET #	REV #
DY 2-28-08		D 1	,

CHK.R ,